Sept. 4, 2014
Revision: REL

Celseon® Air Cooled Condensing Unit

Model: AKA9442ZNACJ
BoM: 2G213-79XP R-404a 1/2 HP

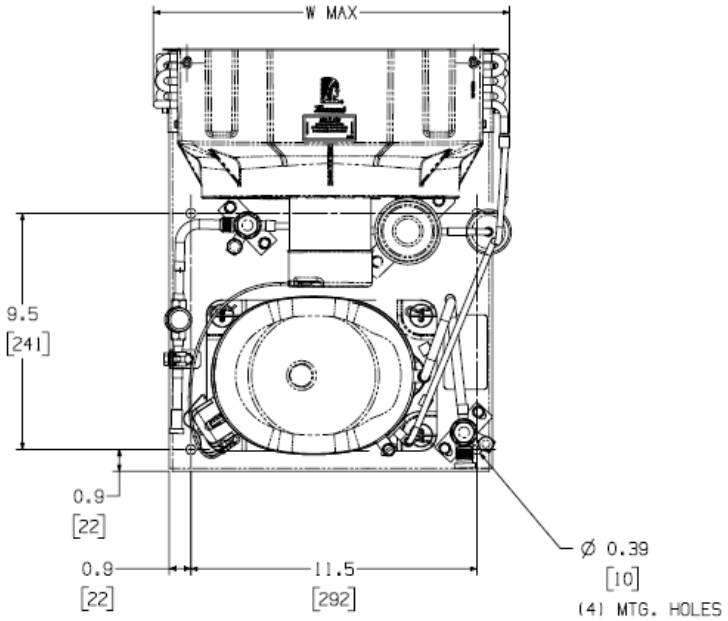

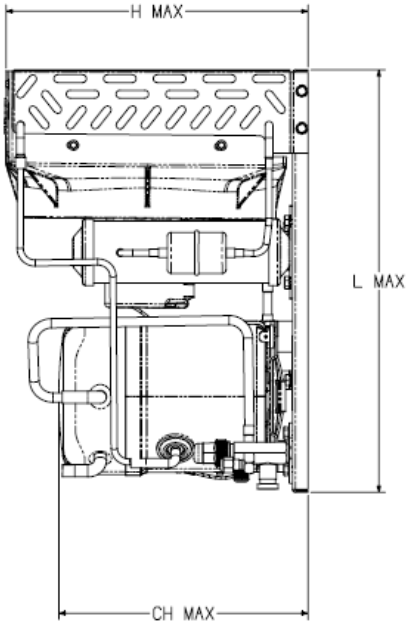

Capacitor Cabinet Assembly Shipped Loose

Model	Dimensions, inches				Line Connection*		Pumpdown	Air	Oil Ch	Gr. Wt.
	L	W	H	CH	Suction	Liquid	90 °F 90%	SCFM	Oz.	Lbs.
AKA9442ZNACJ	17.0	14.3	12.1	10.1	5/8” S	3/8” S	2.7 lbs	230	17	54

* F = Flare, S = Solder, RF or RS = Rotolock with Flare or Solder Connections, C = Compression Fitting
Factory charge: 20 PSIG Nitrogen – **MUST BE EVACUATED**

		Ambient Temperatures											
Evaporator T,		80°F			90°F			100°F			110°F		
°F	PSIG	BTUH	Watts	Cond T	BTUH	Watts	Cond T	BTUH	Watts	Cond T	BTUH	Watts	Cond T
0	33.4	3355	621	98	2691	573	106	2077	526	114	1513	479	121
5	37.6	3859	676	100	3172	636	107	2532	597	115	1943	558	122
10	43.9	4383	731	102	3672	700	109	3007	668	117	2392	637	124
15	49.8	4914	787	104	4179	764	111	3491	740	119	2850	716	126
20	56.1	5439	844	107	4681	828	114	3969	812	122	3302	796	129
25	62.9	5942	901	111	5162	893	118	4425	885	125	3733	877	132
30	70.2	6404	958	115	5601	958	122	4840	958	129	4121	958	136
35	77.9	6803	1017	120	5978	1024	127	5192	1032	134	4444	1040	140
40	87.0	7114	1075	126	6264	1091	132	5450	1106	139	---	---	---
45	95.1	7304	1134	132	6425	1158	138	---	---	---	---	---	---
50	106.2	7330	1194	139	---	---	---	---	---	---	---	---	---

60 Hz Performance
Return gas temp. 40°F, 5°F sub cooling

Sept. 4, 2014
Revision: REL

Specifications/ Parts:

Unit Model	**AKA9442ZNACJ**
Unit Bill of Material	**2G213-79XP**
Refrigeration Range	-10° F to +45° F
Design Pressure Low	181
Design Pressure High	450
Nominal Volts-Hz-Ph	208/230-60-1
Voltage Range	187-254
Min. Circuit Ampacity	6.2
Max. Fuse Size (amps)	15
Compressor Model	AKA9438ZXD
Comp. Bill of Material	AK175ET-037-P2
Compressor RLA/LRA	4.3/31
Overload	External
Relay	820ARR3C29
Run Capacitor	85PR370E36
Run Capacitor Rating	15MFD 370V(M) VDE
Start Capacitor	85685
Start Capacitor Rating	72-88 MFD 330V VDE
Capacitor Cabinet (Loose)	AE1197-102
Fan Motor	810-10012
Fan Motor RLA	0.8
Fan Blade	515-10020
Fan Shroud/Guard Combo	707-00005
Condenser	506-10008
Receiver Tank	510-10000
Liquid Valve	56662
Suction Valve	56661
Filter Drier	71116
Sight Glass	70084
Unit Drawing	DGU1970-05
Wiring Diagram	91266-02
Replacement Kit: Relay	K71-17
Replacement Kit: O/L	K90-16
Replacement Kit: St. Cap	K146-02
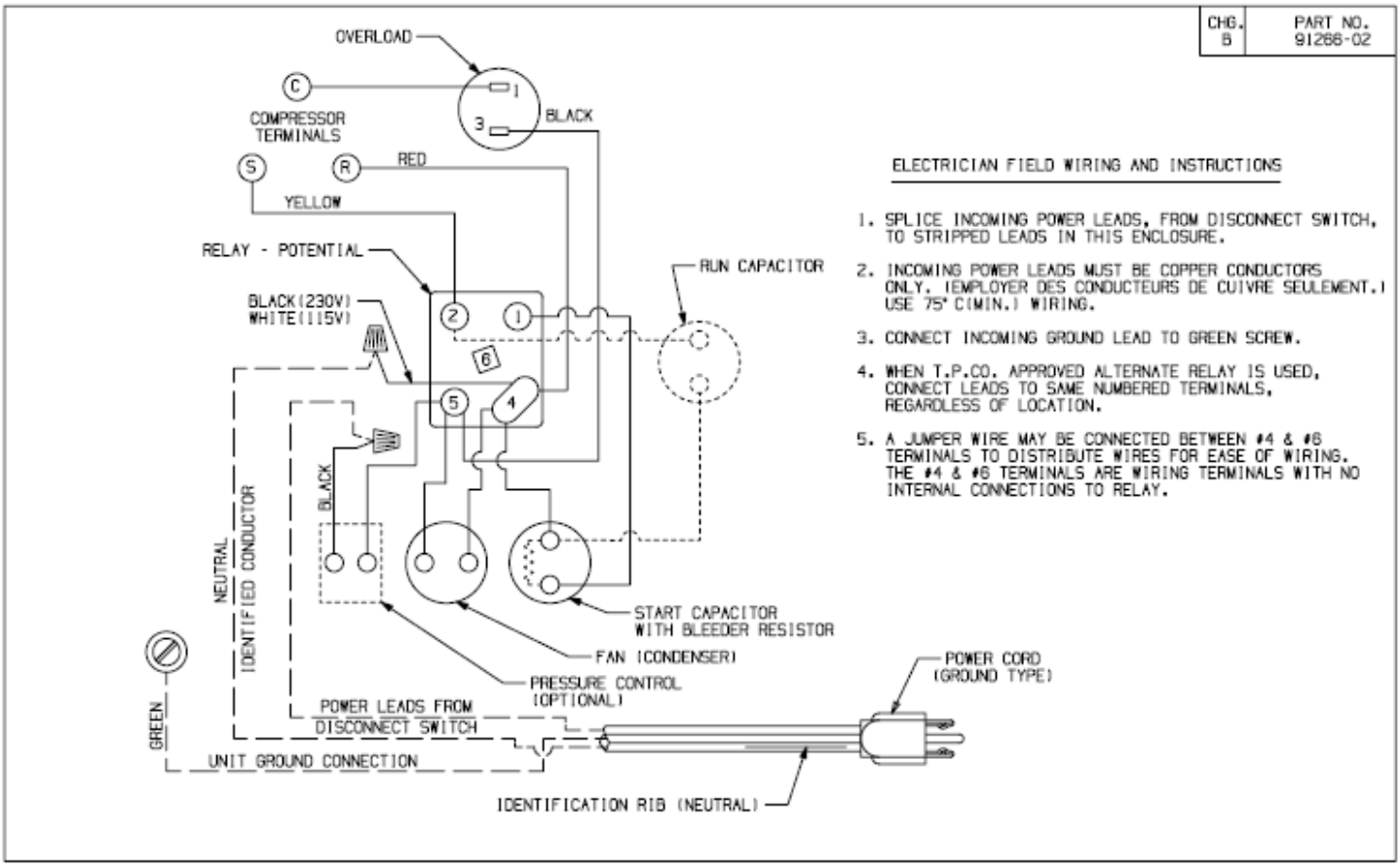
Electrical Diagram Page 3